# BATH TAP (30 GBP)

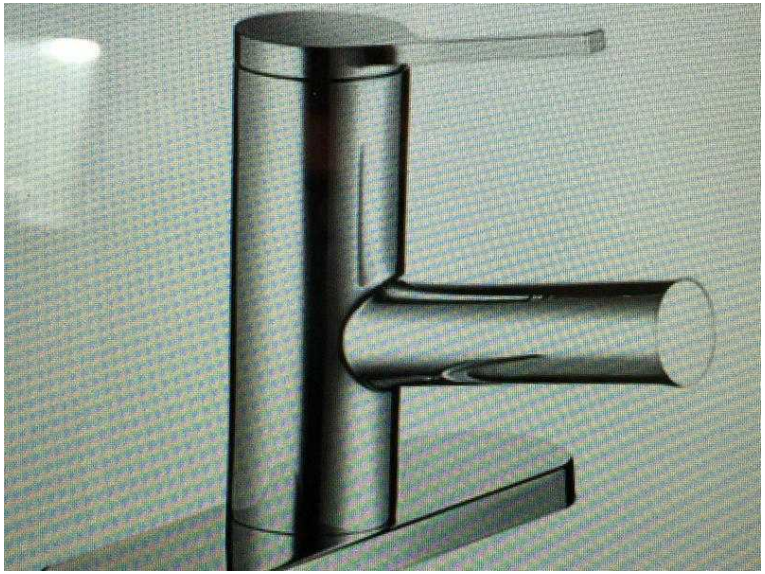

Location **South West, Wiltshire**
https://www.freeadsz.co.uk/x-586962-z

Mira Evolve bath filler tap. Fits 2 tap hole baths. New and unopened. Dimensions in photo on box. RRP over &pound.

BATH TAP https://www.freeadsz.co.uk/x-586962-z
BATH TAP https://www.freeadsz.co.uk/x-586962-z
BATH TAP https://www.freeadsz.co.uk/x-586962-z
BATH TAP https://www.freeadsz.co.uk/x-586962-z
BATH TAP https://www.freeadsz.co.uk/x-586962-z
BATH TAP https://www.freeadsz.co.uk/x-586962-z
BATH TAP https://www.freeadsz.co.uk/x-586962-z
BATH TAP https://www.freeadsz.co.uk/x-586962-z
BATH TAP https://www.freeadsz.co.uk/x-586962-z
BATH TAP https://www.freeadsz.co.uk/x-586962-z